ARCHI8X

Ultra-compact 8″ subwoofer

Highlights:

- 500 Watt program power
- Low frequency extension down to 36Hz without processing
- Precision with immersive infra-sub performance
- Tailor-made high excursion 8″ aluminum driver for superior outdoor performance
- Vibration-cancelling 10″ aluminum passive radiator
- Vibration-decoupled mounting system
- Architecturally discreet and compact design
- Flexible ceiling & wall mount option
- AllWeather build quality with aluminum housing - Fully unprotected outdoor use



Product information:

The ARCHI8X delivers powerful and immersive low frequency performance in a compact architectural design, purpose built for demanding outdoor and indoor applications. With a low frequency extension down to 36 Hz without processing and doubled program power compared to NOBA8, ARCHI8X offers precise and controlled sub performance with minimal visual impact.
At its core, a tailor made high excursion 8 inch aluminum driver is paired with a vibration cancelling 10 inch aluminum passive radiator. This combination ensures deep, accurate bass while minimizing resonance and structural vibration. The vibration decoupled mounting system further isolates the enclosure from surrounding surfaces, preserving clarity even at high output levels.
Built with an AllWeather aluminum housing, the ARCHI8X is designed for fully unprotected outdoor use. Flexible ceiling and wall mounting options make it easy to integrate into architectural environments where discretion, durability, and performance are equally critical.





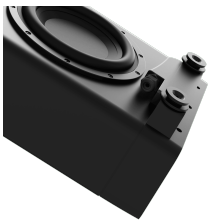



Applications:

- Bars & Restaurants
- Hotels
- Residential

Properties:

Weatherproof

Impedance:

Ω 8 Ohm

We reserve the right to change specifications without notice, this is part of our policy to continually improve our products.

Usage:

 Indoor  Outdoor

System specifications:

Speaker type		8” Bass reflex cabinet
Continuous power (AES)		250 W
Program power handling		500 W
Peak power handling		1000 W
Impedance		8 Ω
Max SPL (Continuous/AES)		115 dB
Sensitivity (1W/1m)		91 dB
Frequency	Range (-10 dB)	36 Hz - 250 Hz
Connectors		Terminal block with linkthrough
Drivers		8" woofer
		10"" passive radiator
	Cone material	Anodized Aluminium
Ingress Protection rating		IPTBA

Product Features:

Dimensions	655 x 170.5 x 383 mm (W x H x D) (Incl. feet & mounting bracket)
Weight	11.47 kg
Operating temperature	-20 °C ~ 70 °C
Construction	Aluminium with plastic side covers
Mounting & handling	Vibration-decoupled mounting system
Colours	Black & White

Variants:

- ARCHI8X/B - Black version
- ARCHI8X/W - White version

We reserve the right to change specifications without notice, this is part of our policy to continually improve our products.

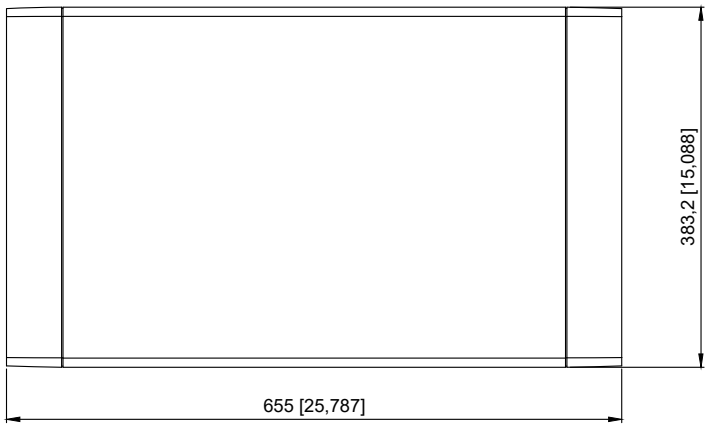

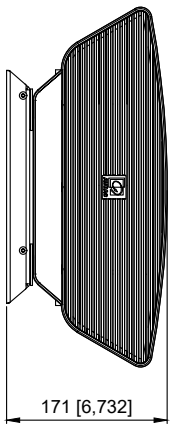

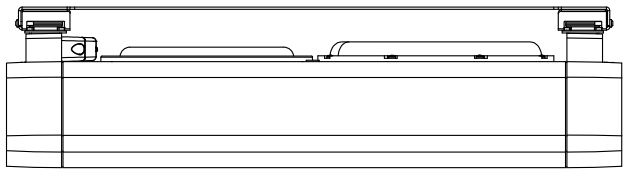

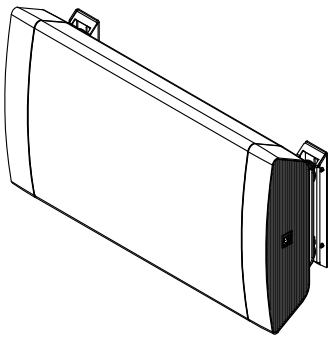

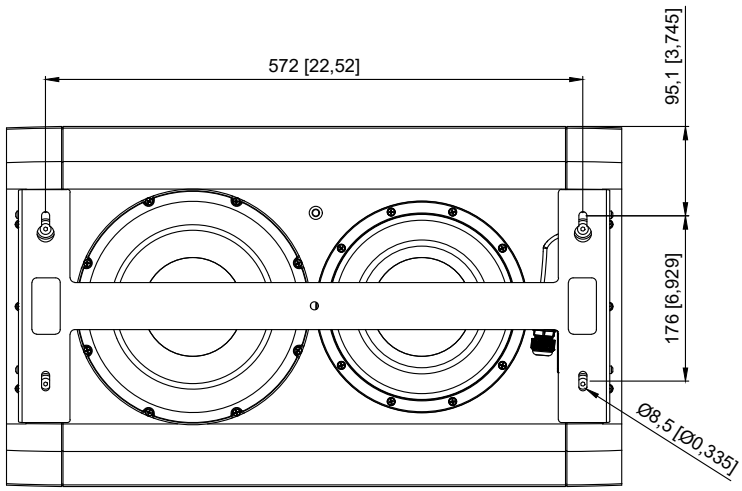

AUDAC	ARCHI8X	Product description ULTRA-COMPACT 8" SUBWOOFER - 250W AES / 8 OHM				
	MM [INCH]	Scale	Outer dimensions (w x h x d)		Unit height	Weight
		1 : 7	655 x 383,2 x 171 mm 25,787 x 15,088 x 6,732 "		N/A	11,5 kg 25,35 lbs

We reserve the right to change specifications without notice, this is part of our policy to continually improve our products.